WT9011DCL-BT50 Data Sheet & User Manual

Contents

1. Product Introduction 1
1.1. Product Overview 1
1.2. Product Features 1
2. Parameter indicators 2
Accelerometer parameters 2
2.2. Gyroscope parameters 2
2.3. Magnetometer parameters 3
2.4. Pitch and roll angle parameters 3
2.5. Heading Angle Parameters 3
2.6. Module Parameters 4
2.6.1. Basic Parameters 4
2.6.2. Electrical parameters 5
2.6.3. Indicator Light Description 5
2.7. Product Dimensions 6
2.8. Axial diagram 6
3. Interface Definition 6
3.1. Interface Description 6
3.2. Connecting the Bluetooth adapter to PC 7
3.3. Bluetooth wireless connection to PC 7
3.3.1. Connection steps 7
3.3.2. Switching displacement mode 8
3.4. Bluetooth wireless connection to PC 9
3.5. Bluetooth wireless connection to APP 9
3.5.1. Connection steps 10

3.5.2. Switching displacement mode 11

4. Product Packaging 12

4.1. Sample packaging 12

1. Product Introduction

1.1. Product Overview

- The module integrates high-precision gyroscopes, accelerometers, and geomagnetic field sensors, and uses a high-performance microprocessor and advanced dynamics solver and Kalman dynamic filtering algorithms to quickly calculate the module's current real-time motion posture.
- The use of advanced digital filtering technology can effectively reduce measurement noise and improve measurement accuracy.
- The module integrates an attitude solver, which, combined with the dynamic Kalman filter algorithm, can accurately output the current attitude of the module in a dynamic environment. The attitude measurement accuracy is 0.2 degrees, and the stability is extremely high. The performance is even better than some professional inclinometers!
- The high-performance Cortex-M4 core processor runs at a main frequency of up to 168MHZ, balancing low power consumption and high performance.
- Bluetooth BLE5.0 wireless transmission, stable transmission, maximum distance up to 90 meters.

1.2. Product Features

- The module integrates high-precision gyroscopes, accelerometers, and geomagnetic field sensors, and uses a high-performance microprocessor and advanced dynamics solver and Kalman dynamic filtering algorithms to quickly calculate the module's current real-time motion posture.
- The use of advanced digital filtering technology can effectively reduce measurement noise and improve measurement accuracy.
- The module integrates an attitude solver, which, combined with the dynamic Kalman filter algorithm, can accurately output the current attitude of the module in a dynamic environment. The attitude measurement accuracy is 0.2°, the stability is extremely high, and the performance is even better than some professional inclinometers.
- The Z-axis heading angle incorporates geomagnetic sensor filtering and fusion, resolving the cumulative error caused by gyroscope integral drift in the 6-axis algorithm. This ensures long-term stable heading angle output.

Note: Due to magnetic field detection, calibration is required before use. During use, the device must be kept at least 20 cm away from magnetic interference areas, electronic devices, magnets, speakers, and other hard magnetic objects.

- Working current: ≈ 16mA, standby current 14uA-16uA.
- Data interface: baud rate 115200.
- The output content can be selected arbitrarily, data output frequency: 0.2Hz~200Hz, 50Hz~200Hz data package transmission, default 10HZ.
- 4-layer PCB technology, thinner, smaller and more reliable.
- Bluetooth 5.0: Supports Android/IOS operating systems (specific actual use is subject to the final device)

2. Parameter indicators

2.1. Accelerometer parameters

Parameter	Condition	Typical values
Range		±16g
Resolution	±16g	0.0005(g/LSB)
RMS noise	Bandwidth = 100 Hz	0.75~1mg-rms
Static zero drift	Horizontal placement	±20~40mg
Temperature Drift	-40°C ~ +85°C	±0.15mg/℃
bandwidth		5~256Hz

2.2. Gyroscope parameters

Parameter	Condition	Typical values
Range		±2000°/s
Resolution	±2000°/s	0.061(°/s)/(LSB)
RMS noise	Bandwidth = 100 Hz	0.028~0.07(°/s)-rms

Static zero drift	Horizontal placement	±0.5~1°/s
Temperature Drift	-40°C ~ +85°C	±0.005~0.015 (°/s)/℃
bandwidth		5~256Hz

2.3. Magnetometer parameters

Parameter	Condition	Typical values
Range		±2Gauss
Resolution	±2Gauss	0.0667mGauss/LSB

2.4. Pitch and roll angle parameters

Parameter	Condition	Typical values
Range		X:±180°
		Y:±90°
Inclination accuracy		0.2°
Resolution	Horizontal placement	0.0055°
Temperature Drift	-40°C ~ +85°C	±0.5~1°

2.5. Heading Angle Parameters

Parameter	Condition	Typical values
Range		Z:±180°
Heading accuracy	9-axis algorithm, magnetic field calibration, dynamic/static	1° (without magnetic field interference) 【1】
	6-axis algorithm, static	0.5° (dynamic integral cumulative error) 【2】

Resolution	Horizontal placement	0.0055°

Note:

【1】Please calibrate the magnetic field in the test environment before use to ensure that the sensor is familiar with the magnetic field in the environment. Please stay away from magnetic interference during calibration.

【2】In some vibration environments, there will be cumulative errors. The specific error cannot be estimated. Please refer to the actual test.

2.6. Module Parameters

2.6.1. Basic Parameters

Parameter	Condition	Minimum	Default	Maximum
Communication interface	Bluetooth	115200bps	115200bps	115200bps
Output content		3-axis acceleration, 3-axis angular velocity, 3-axis magnetic field, 3-axis angle, quaternion		
Output rate		0.2Hz	10Hz	200Hz
Startup time				1000ms
Number of cascades	Computer Bluetooth			4
Bluetooth transmission distance	open environment		50m	90m
Operating temperature		-20℃		60℃
Storage temperature		-40 ℃		85 ℃
impact resistant				20000g
weight	9g			

2.6.2. Electrical parameters

Parameter	Condition	Minimum	Default	Maximum
Charging voltage			5V	
Battery voltage			3.7V	
Working current	10HZ		4.5mA	
Broadcast current				
Standby current			14uA	
Battery capacity			100mAH	
Working hours				20 hours
Charging time				2 hours

2.6.3. Indicator Light Description

WT9011DCL-BT50 has 4 states:

①State 1 is standby (off).

② State 2 is when the button is pressed in state 1, the system broadcasts waiting for connection and flashes the indicator light.

③ State 3: If there is no connection after 1 minute in state 2, the indicator light will be turned off (but it is still broadcasting and the phone can still search for this device).

④ State 4 is to shut down the device after 24 hours without connection in state 3 (switch back to state 1). Except for state 1, long pressing the button will shut down the device (switch back to state 1).

When the sensor is powered on, it will enter sleep mode after 1 minute without any connection. The light will not flash in sleep mode. If there is no connection for 24 hours, it will automatically shut down.

After connection, the indicator light flashes once every 2 seconds when the battery level is above 80%, once every second when the battery level is between 50% and 80%, and flashes quickly when the battery level is below 20%.

2.7. Product Dimensions

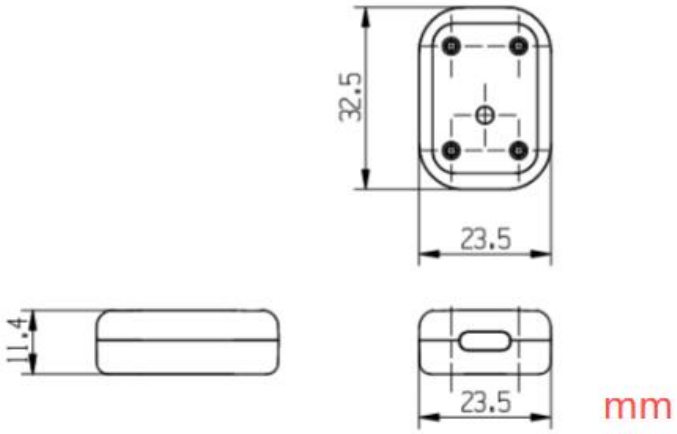

2.8. Axial diagram

3. Interface Definition

3.1. Interface Description

Interface Name	Interface Function
TYPE-C	Charge

3.2. Connecting the Bluetooth adapter to PC

1. CH340 driver download link:

https://drive.google.com/file/d/1JidopB42R9EsCzMAYC3Ya9eJ8JbHapRF/view?usp=drive_link

2. Witmotion software download link:
https://drive.google.com/file/d/10xysnkuyUwi3AK_t3965SLr5Yt6YKE-u/view?usp=drive_link

3.3. Bluetooth wireless connection to PC

3.3.1. Connection steps

1.Turn on your computer's Bluetooth

2. Open the Witmotion PC software.

①Click"Product"

②Search model **WT9011DCL-BT50**

③Click "Search for device"

④Check the identified Bluetooth device. If the data on the host computer interface is updated, it means the connection is successful.

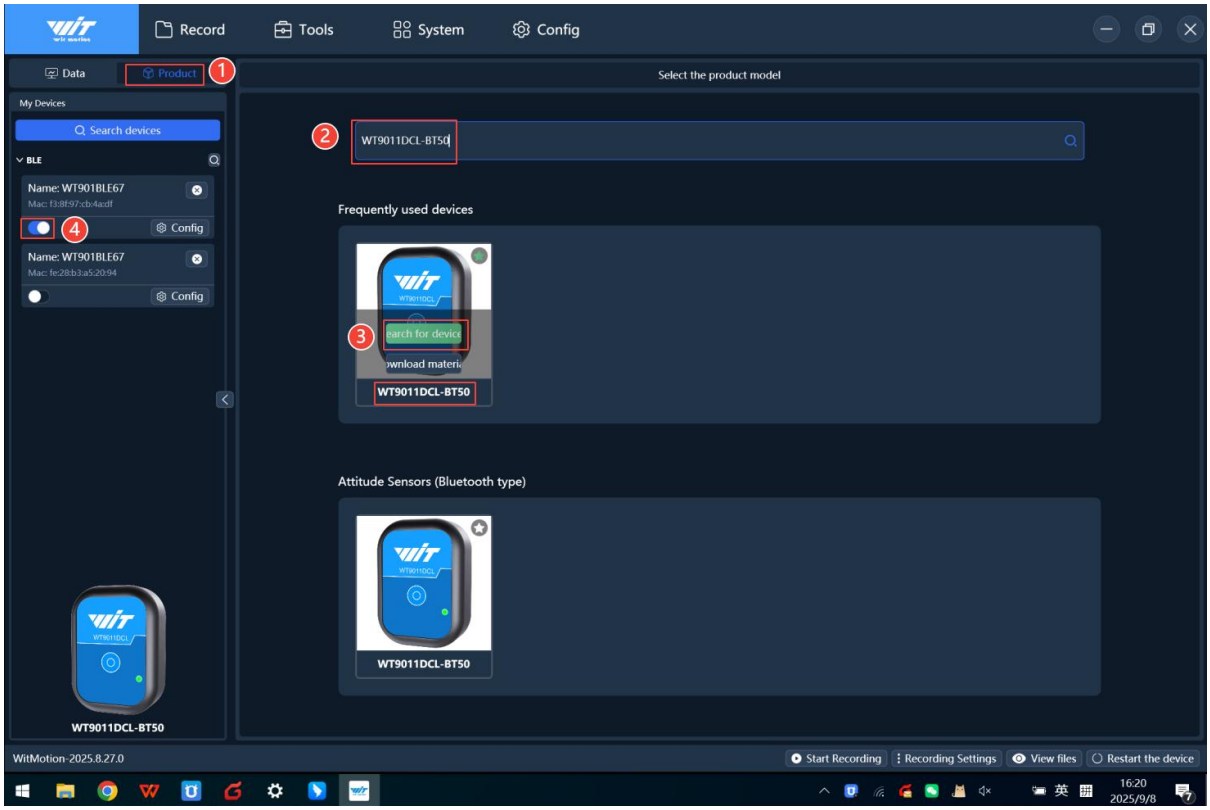

3.3.2. Switching displacement mode

1. Open the "Displacement Scatter Plot"

2. Check "Displacement" and then rotate the sensor to see the displacement trajectory and displacement speed curve.

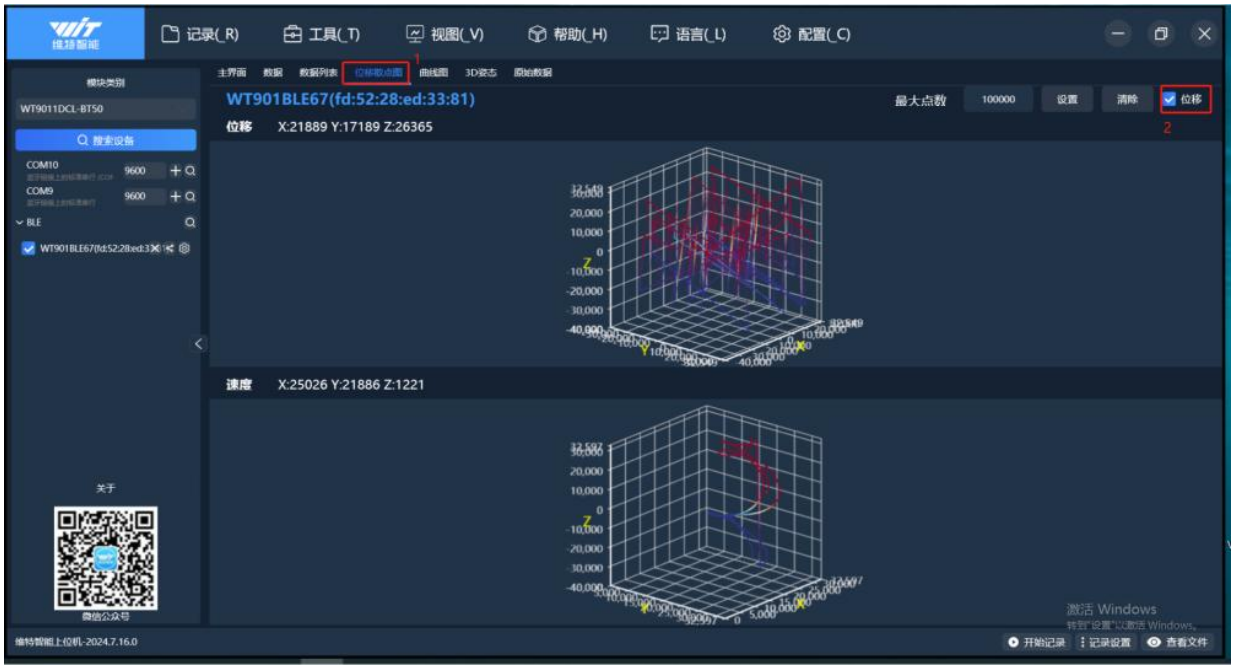

Note: After switching to displacement mode, only displacement, displacement velocity, and angle data are output; acceleration and angular velocity are not

output. If you want to output acceleration, you need to turn off the displacement output button.

3.4. Bluetooth adapter connects to sensor

1. Open the Witmotion PC software.

①Click"Product"

②Search model **WT9011DCL-BT50**

③Click "Search for device"

④ Click “Tools”

⑤ Click “Bluetooth 5.0 serial adapter(S)”

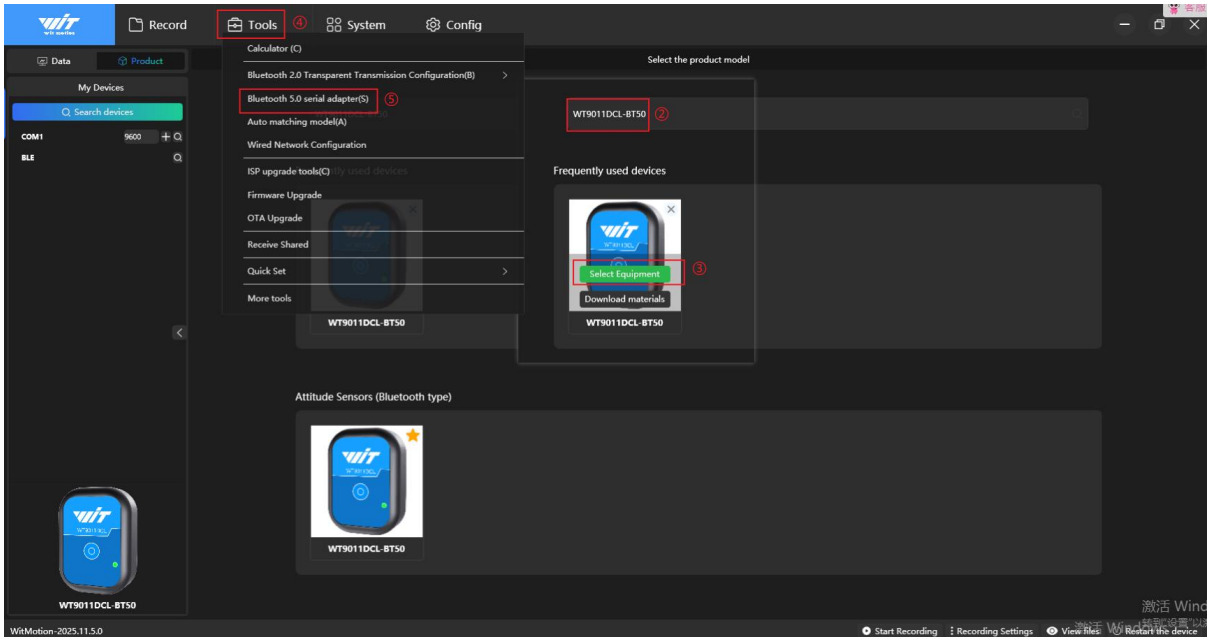

3.5. Bluetooth wireless connection to APP

3.5.1. Connection steps

1. APP Download

①Android APP download link:

https://drive.google.com/drive/folders/1rXb82bFbgQjIRalKGEgMyQTMrnjxssgR?usp=drive_link

②iOS app download steps: Please search "WitMotion" in the App store directly.

Turn on your phone's Bluetooth

2. Turn on your phone's Bluetooth

3. Open the APP

①②③Select device model **WT9011DCL-BT50.**

④Start the surrounding search.

⑤Turn on Bluetooth connection.

⑥The device is successfully connected.

⑦Open the main interface.

⑧Open the dashboard interface and you can see the data updated, indicating that the sensor is connected successfully.

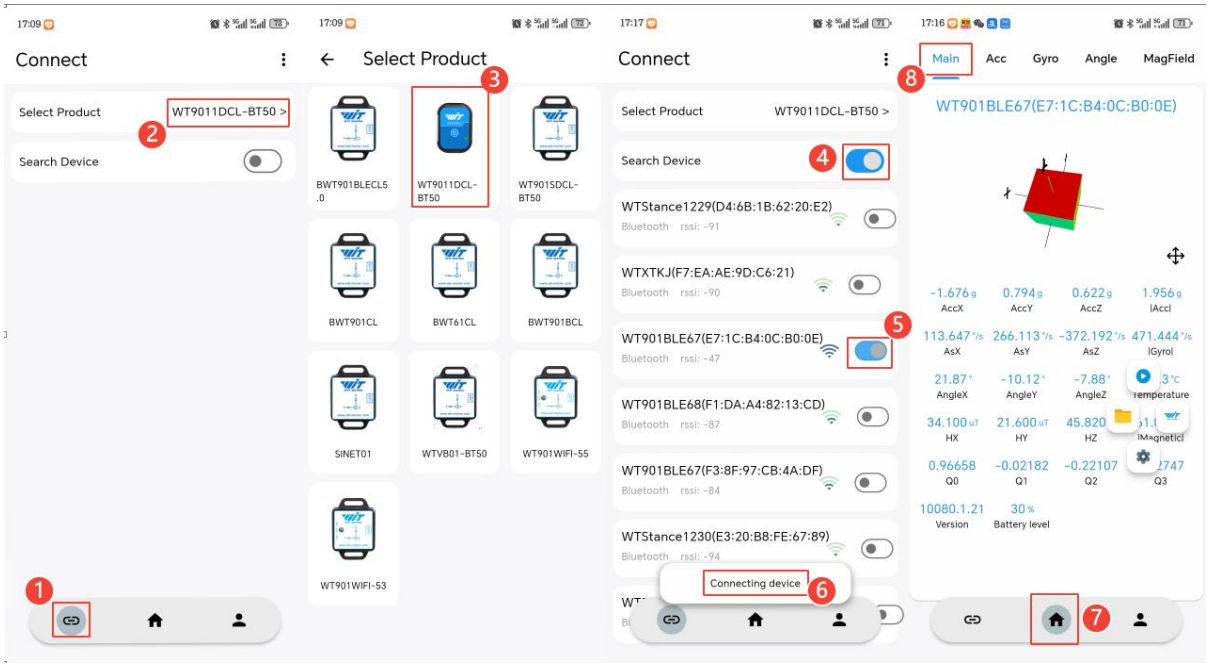

3.5.2. Switching displacement mode

1. Turn on your phone's Bluetooth

2. Open the APP

①②③Select device model **WT9011DCL-BT50.**

④Start the surrounding search.

⑤Turn on Bluetooth connection.

⑥The device is successfully connected.

⑦Open the main interface.

⑧Click "Trajectory"

⑨Open the trajectory interface and move the sensor in space to see the trajectory update.

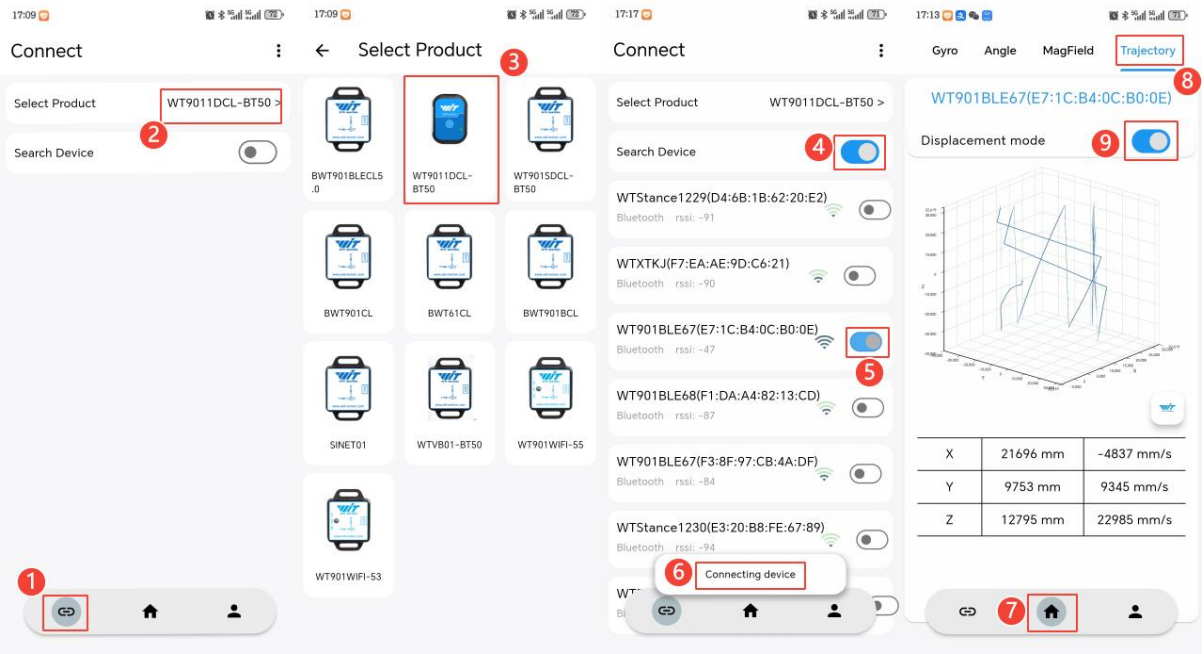

Note: After switching to displacement mode, only displacement, displacement velocity, and angle data are output; acceleration and angular velocity are not output. If you want to output acceleration, you need to turn off the displacement output button.

4. Product Packaging

4.1. Sample packaging